GENERATOR [i-ELOOP]

id131704501000

Purpose, Function

- A variable voltage type generator has been adopted for the generator which can generate 12—24.3 V according to the capacitor (i-ELOOP) storage conditions.

Construction

- The generator is located on the left side of the engine (vehicle front side).

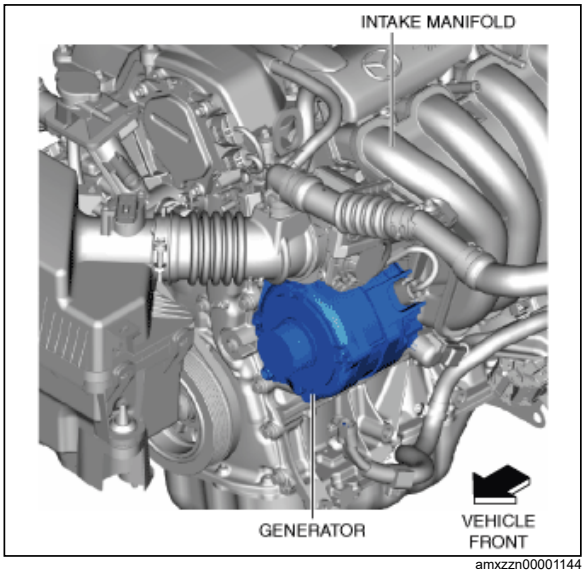

amxzzn00001144

- The generator consists of the following parts:

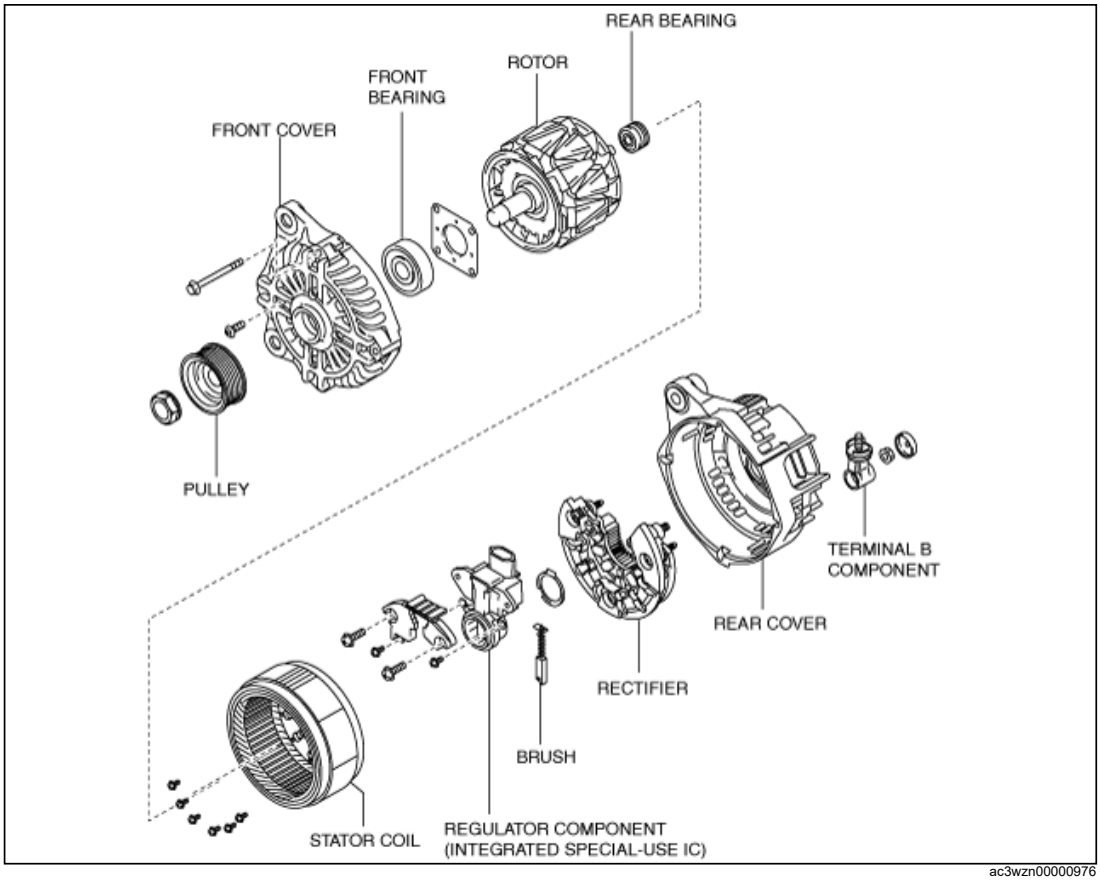

ac3wzn00000976

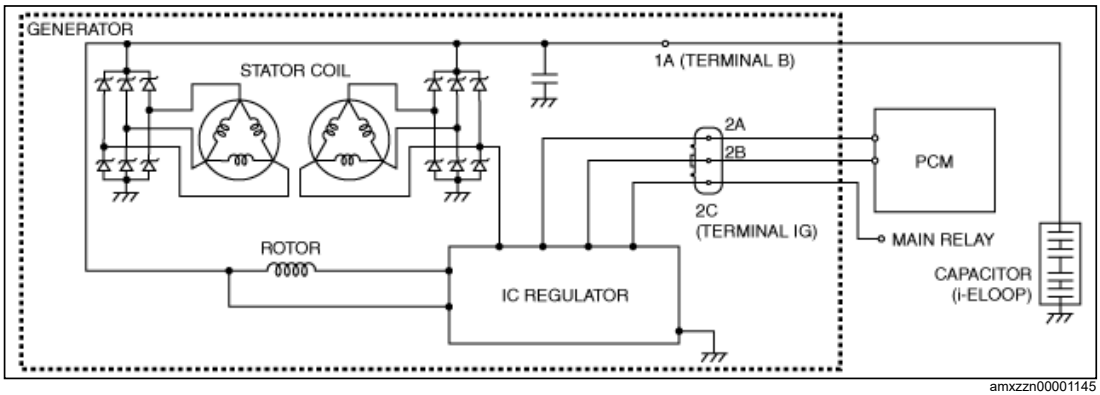

amxzzn00001145

- To handle a maximum of 24.3 V, the voltage resistance performance of the diode has been improved.
- The IC regulator built into the regulator component has the following protection functions which function during overheating/over-voltage/over-current.

Excess temperature protection function

— If the IC regulator reaches the specified temperature, the generator output current is restricted to suppress a rise in the temperature of the generator.

Excess voltage protection function

— If an excess excitation current control signal from the PCM is input, the generator output voltage is restricted to suppress application of excess voltage to the capacitor (i-ELOOP).

Excess-current protection function

— If the excitation current reaches the specified value, the excitation current is interrupted to restrict power generation by the generator.

- The initial excitation current to the rotors is supplied from the capacitor (i-ELOOP). When excitation current is supplied from the capacitor (i-ELOOP) and the generator begins generating electricity, the excitation current from the capacitor (i-ELOOP) is interrupted. After the generator begins generating electricity, the power generated by the generator is used for excitation current.

Fail-safe

DC-DC converter (i-ELOOP)

DTC	Fail-safe
P0A12:00	• Inhibits engine-stop by operating the i-stop function. (With i-stop)
P1794:00	• Inhibits engine-stop by operating the i-stop function. • Inhibits the i-ELOOP control. • Switches to bypass mode which shuts the capacitor (i-ELOOP) off.
P1794:01	
P1794:13	
P1794:14	
P1794:1B	
P1794:49	
P1794:11	• Inhibits engine-stop by operating the i-stop function. • Inhibits the i-ELOOP control. • Inhibits the pre-charge control. • Switches to bypass mode which shuts the capacitor (i-ELOOP) off.

PCM

DTC	Fail-safe
P2502:00	• Inhibits engine-stop by operating the i-stop function. • Generator switch to default mode requested (14.5 V constant voltage power generation). • Transition to i-ELOOP bypass mode.
P2503:00	
P2504:00	• Inhibits engine-stop by operating the i-stop function. • Generator switch to default mode requested. If the temperature of the generator exceeds the specified value, the generator itself stops power generation. But, if the internal circuit of the generator is malfunctioning, the generator may not accept the demand from the PCM.